Victaulic® AGS™ Vic-300™ MasterSeal™ Butterfly Valve
Series W761

20.06

1.0 PRODUCT DESCRIPTION

Available Sizes

- 14 – 24"/DN350 – DN600

Maximum Working Pressure

- Accommodates pressures up to 300 psi/2100 kPa/21 bar
- Full working pressure for bi-directional services

NOTE

- Before start up, the test pressure may be increased to 1 ½ times the maximum working pressure. This is for a one-time system test and must be performed at ambient conditions.

Operating Temperature

- Dependent on seat selection from section 3.0

Application

- Designed for use with carbon steel and ductile iron piping materials prepared to Victaulic AGS™ groove specifications. The system designer is responsible for verifying suitability of mating component materials with the intended fluid media. Valve bodies, discs, and other wetted components shall be compatible with the material flowing through the piping system.

Actuation Options

- Gear operator (14 – 24"/DN350 – DN600)

2.0 CERTIFICATION/LISTINGS

ALWAYS REFER TO ANY NOTIFICATIONS AT THE END OF THIS DOCUMENT REGARDING PRODUCT INSTALLATION, MAINTENANCE OR SUPPORT.

 © 2024 Victaulic Company. All rights reserved.

3.0 SPECIFICATIONS – MATERIAL

Series W761 AGS™ Vic-300™ MasterSeal™ Butterfly Valve

Body: Ductile iron conforming to ASTM A536, Grade 65-45-12, black PPS coated.

Disc: Ductile iron conforming to ASTM A536, Grade 65-45-12, black PPS coated.

Seat: (specify choice)

- ☐ **Victaulic EPDM**

  EPDM (Green color code). Temperature range –30°F to +230°F/–34°C to +110°C. NOT RECOMMENDED FOR PETROLEUM SERVICES OR STEAM SERVICES.

- ☐ **Victaulic Nitrile**

  Nitrile (Orange color code). Temperature range +10°F to +150°F/–12°C to +66°C. Not compatible for hot water services over +150°F/+66°C or for hot dry air over +140°F/60°C. NOT RECOMMENDED FOR HOT WATER SERVICES OR STEAM SERVICES.

- ☐ **Victaulic Fluoroelastomer**

  Fluoroelastomer (Blue color code). Temperature range +20°F to +300°F/–7°C to +149°C. NOT RECOMMENDED FOR STEAM SERVICES.

Stem: 17-4PH stainless steel conforming to ASTM A564.

Bearing: Reinforced PTFE.

Thrust Bearing: Bronze.

Disc Driving Pin: 17-4PH stainless steel.

Stem Seal: (specify choice)

- ☐ Standard: EPDM.
- ☐ Optional: Nitrile.
- ☐ Optional: Fluoroelastomer

Bottom Cover Plate O-ring: (specify choice)

- ☐ Standard: EPDM.
- ☐ Optional: Nitrile.
- ☐ Optional: Fluoroelastomer

Cover Plate: Steel.

Gasket Retaining Segment: 304 stainless steel.

Seal Retaining Screw: 304 stainless steel.

Stem key: Alloy steel.

Retaining Ring: 302 stainless steel.

Upper Shaft Spacer: Cold rolled steel.

Gear Operator (with options below):

- ☐ Handwheel with chainwheel.
- ☐ 2" square nut.
- ☐ Thermal barrier.

 © 2024 Victaulic Company. All rights reserved.

3.0 SPECIFICATIONS – MATERIAL (CONTINUED)

Series W761 AGS™ Vic-300™ MasterSeal™ Butterfly Valve

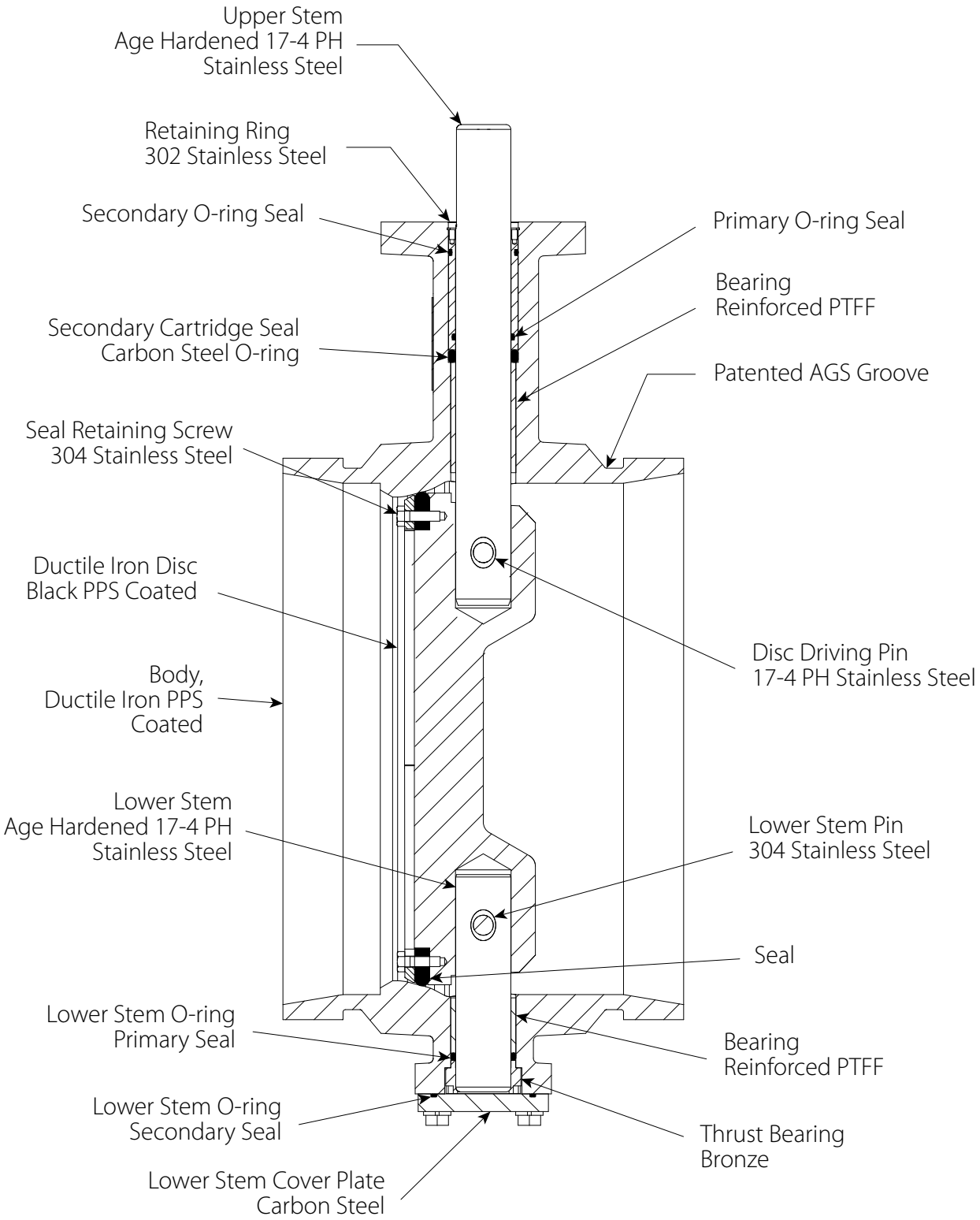

 © 2024 Victaulic Company. All rights reserved.

4.0 DIMENSIONS

Series W761 AGS™ Vic-300™ MasterSeal™ Butterfly Valve – Bare Valve

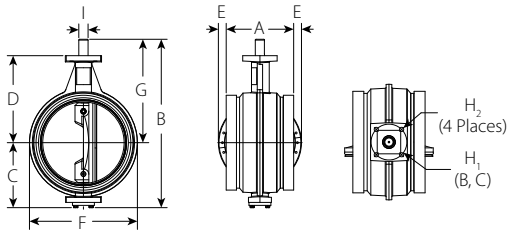

Size		Dimensions – Bare Valve													Weight
Nominal inches DN	Actual Outside Diameter inches mm	A inches mm	B inches mm	C inches mm	D inches mm	E inches mm	F inches mm	G inches mm	H1 inches mm	H2 inches mm	I inches mm	Mounting Key Information Qty.	Mounting Key Information Size inches	ISO 5211 Flange Designation	Approx. (Each) lb kg
14 DN350	14.000 355.6	10.00 254	25.00 635	9.75 246	13.00 328	1.25 29	16.00 407	15.38 390	4.96 126	0.58 15	1.38 35	1	⅜ Square x 1⅞ Length	F12	125.0 56.5
16 DN400	16.000 406.4	10.50 267	28.00 710	11.00 278	14.13 359	1.88 48	18.00 458	17.13 432	4.96 126	0.58 15	1.50 39	1	⅜ Square x 2½ Length	F12	153.0 69.5
18 DN450	18.000 457.2	11.00 280	30.00 761	12.38 313	15.00 381	2.63 67	20.00 508	17.63 448	4.96 126	0.58 15	1.75 45	2	⅜ Square x 2 Length	F12	199.0 90.5
20 DN500	20.000 508.0	11.50 293	33.25 843	14.13 358	16.25 410	3.50 87	23.00 585	19.13 486	5.51 140	0.67 17	2.00 51	2	½ Square x 2¼ Length	F14	285.0 129.5
24 DN600	24.000 609.6	12.00 305	40.13 1017	16.13 408	20.13 511	5.25 131	26.75 679	24.00 609	6.50 165	0.84 21	2.25 58	2	⅝ Square x 3 Length	F16	451.0 204.5

NOTES

- The AGS Vic-300 valves have longer E to E dimensions and AGS groove dimensions. They cannot be used to replace existing Series 706 butterfly valves.
- Bare valve dimensions are provided for reference only. DO NOT attempt to operate a Series W761 Butterfly Valve without a gear operator installed.

 © 2024 Victaulic Company. All rights reserved.

4.1 DIMENSIONS

Series W761 AGS™ Vic-300™ MasterSeal™ Butterfly Valve – With Gear Operator

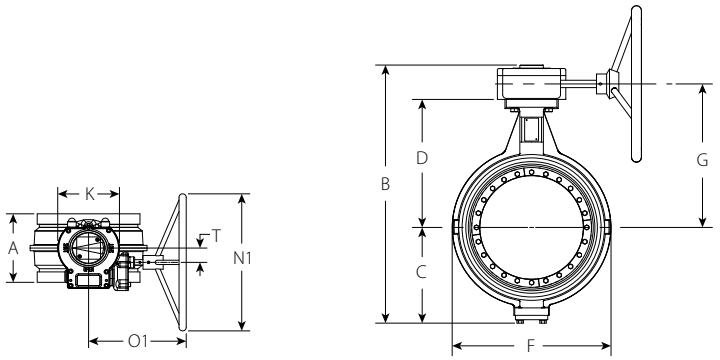

Size		Dimensions											Weight
									Handwheel				
Nominal inches DN	Actual Outside Diameter inches mm	A inches mm	B inches mm	C inches mm	D inches mm	F inches mm	G inches mm	K inches mm	N1 inches mm	O1 inches mm	T inches mm	Turns to Close	Approx. (Each) lb kg
14 DN350	14.000 355.6	10.00 254	28.63 727	9.75 246	13.00 328	16.00 407	19.00 481	7.88 200	19.69 500	12.01 306	3.50 87	9.5	152.0 69.0
16 DN400	16.000 406.4	10.50 267	32.00 811	11.00 278	14.13 359	18.00 458	21.00 533	8.75 220	19.69 500	13.63 347	4.13 105	13.75	187.0 85.0
18 DN450	18.000 457.2	11.00 280	34.75 881	12.38 313	15.00 381	20.00 508	22.38 568	8.50 215	19.69 500	13.70 348	2.13 54	27	257.0 116.5
20 DN500	20.000 508.0	11.50 293	38.13 968	14.13 358	16.25 410	23.00 585	24.13 611	11.25 285	19.69 500	16.42 418	5.13 131	54.25	477.0 216.5
24 DN600	24.000 609.6	12.00 305	46.38 1176	16.13 408	20.13 511	26.75 679	30.25 768	14.63 371	27.56 700	19.11 486	7.25 183	81.5	700.0 317.5

NOTE

- The AGS Vic-300 valves have longer E to E dimensions and AGS groove dimensions. They cannot be used to replace existing Series 706 butterfly valves.

 © 2024 Victaulic Company. All rights reserved.

4.2 DIMENSIONS

Accessories

Chainwheels

Chainwheels are mounted to the gear operator handwheels. Sprocket rim and guide arms are made of cast aluminum. Chain is galvanized steel weldless lock link chain.

HOW TO ORDER:

Specify type valve and operator by valve numbering system shown on page 12.

Always specify length of chain required.

For insulation and locking device, contact Victaulic for details. Handwheel input shaft extensions are not for use with chainwheels.

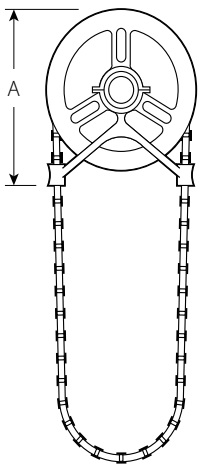

Chainwheel and Guide

Size		Chainwheel Dimensions			Weight
Nominal inches DN	**Sprocket Size** inches	**Chain Trade Size**	**Chainwheel OD** inches mm	**A** inches mm	**Approx. (Each)** lb kg
14 - 20 DN350 - DN500	4	5/0	21.50 547	21.50 547	37.0 17.0
24 DN600	5	5/0	30.00 762	30.25 769	58.0 26.5

 © 2024 Victaulic Company. All rights reserved.

5.0 PERFORMANCE

Series W761 AGS™ Vic-300™ MasterSeal™ Butterfly Valve

C_v/K_v values for flow of water at +60°F/+16°C with various disc positions are shown in the table below.

Formulas for C_v/K_v values:

$$\Delta P = \frac{Q^2}{C_v^2}$$

$$Q = C_v \times \sqrt{\Delta P}$$

Where:
Q = Flow (GPM)
ΔP = Pressure Drop (psi)
C_v = Flow Coefficient

$$\Delta P = \frac{Q^2}{K_v^2}$$

$$Q = K_v \times \sqrt{\Delta P}$$

Where:
Q = Flow (m^3/hr)
ΔP = Pressure Drop (Bar)
K_v = Flow Coefficient

Size		Flow Characteristics Full Open Cv Kv
14 DN350	14.000 355.6	9360 8096
16 DN400	16.000 406.4	12400 10726
18 DN450	18.000 457.2	15900 13754
20 DN500	20.000 508.0	19800 17127
24 DN600	24.000 609.6	28900 24999

 © 2024 Victaulic Company. All rights reserved.

5.1 PERFORMANCE

Series W761 AGS™ Vic-300™ MasterSeal™ Butterfly Valve

Flow Characteristics

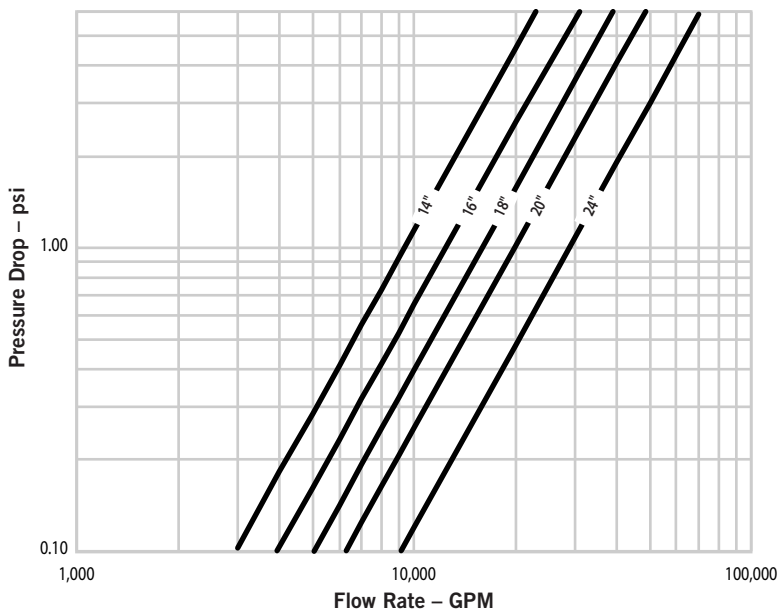

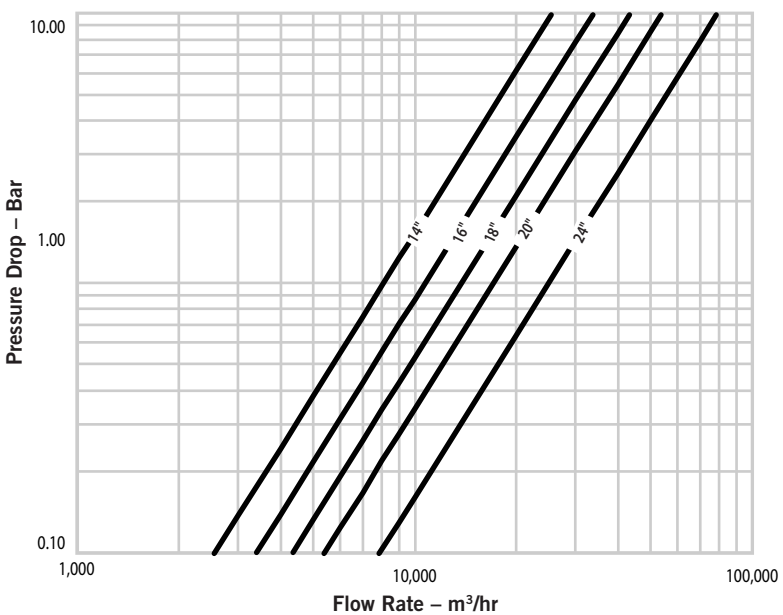

 © 2024 Victaulic Company. All rights reserved.

5.2 PERFORMANCE

Series W761 AGS™ Vic-300™ MasterSeal™ Butterfly Valve

Flow Coefficients

Size		Flow Coefficients – C_v/K_v Disc Position (Deg Open)				
		70˚	60˚	50˚	40˚	30˚
Nominal inches DN	Actual Outside Diameter inches mm	C_v K_v	C_v K_v	C_v K_v	C_v K_v	C_v K_v
14	14.000	4350	3040	2130	1490	900
DN350	355.6	3763	2630	1842	1289	779
16	16.000	5680	3940	2730	1880	1130
DN400	406.4	4913	3408	2361	1626	977
18	18.000	7200	4970	3420	2340	1400
DN450	457.2	6228	4299	2958	2024	1211
20	20.000	8810	6010	4080	2740	1610
DN500	508.0	7621	5199	3529	2370	1393
24	24.000	12700	8580	5760	3800	2210
DN600	609.6	10986	7422	4982	3287	1912

5.3 PERFORMANCE

Series W761 AGS™ Vic-300™ MasterSeal™ Butterfly Valve

Maximum Allowable Pressure Drops

Size		Maximum Allowable Pressure Drops Disc Position (Deg Open)					
		90˚	70˚	60˚	50˚	40˚	30˚
Nominal inches DN	Actual Outside Diameter inches mm	psi kPa	psi kPa	psi kPa	psi kPa	psi kPa	psi kPa
14	14.000	0.54	2.5	5.1	10	21	59
DN350	355.6	4	17	35	69	145	407
16	16.000	0.54	2.6	5.4	11	24	65
DN400	406.4	4	18	37	76	165	448
18	18.000	0.54	2.6	5.5	12	25	70
DN450	457.2	4	18	38	83	172	483
20	20.000	0.54	2.7	5.8	13	28	81
DN500	508.0	4	19	40	90	193	558
24	24.000	0.54	2.8	6.1	14	31	82
DN600	609.6	4	19	42	97	214	565

 © 2024 Victaulic Company. All rights reserved.

5.4 PERFORMANCE

Series W761 AGS™ Vic-300™ MasterSeal™ Butterfly Valve

Maximum Allowable Flow Rates

Size		Maximum Allowable Flow Rates Disc Position (Deg Open)					
		90˚	70˚	60˚	50˚	40˚	30˚
Nominal inches DN	Actual Outside Diameter inches mm	gpm lpm	gpm lpm	gpm lpm	gpm lpm	gpm lpm	gpm lpm
14 DN350	14.000 355.6	6880 26044	6890 26081	6900 26119	6910 26157	6910 26157	6890 26081
16 DN400	16.000 406.4	9120 34523	9120 34523	9130 34561	9140 34599	9130 34561	9140 34599
18 DN450	18.000 457.2	11700 44289	11700 44289	11700 44289	11700 44289	11700 44289	11800 44668
20 DN500	20.000 508.0	14600 55267	14600 55267	14600 55267	14600 55267	14600 55267	14600 55267
24 DN600	24.000 609.6	21300 80629	21300 80629	21200 80251	21200 80251	21200 80251	17400 65866

 © 2024 Victaulic Company. All rights reserved.

5.5 PERFORMANCE

Series W761 AGS™ Vic-300™ MasterSeal™ Butterfly Valve

Seating-Unseating Torque Requirements

Size		Seating/Unseating Torque Differential Pressure						
		0 psi 0 kPa	50 psi 345 kPa	100 psi 690 kPa	150 psi 1035 kPa	175 psi 1200 kPa	235 psi 1620 kPa	300 psi 2070 kPa
inches DN	inches mm	in·lbs N·m	in·lbs N·m	in·lbs N·m	in·lbs N·m	in·lbs N·m	in·lbs N·m	in·lbs N·m
14 DN350	14.000 355.6	2970 335.6	3830 432.7	4600 519.7	5000 564.9	5500 621.4	7400 836.1	9660 1091.4
16 DN400	16.000 406.4	3875 437.8	4820 544.6	5620 635.0	6000 677.9	6500 734.4	10000 1129.9	15200 1717.4
18 DN450	18.000 457.2	4900 553.6	6005 678.5	6820 770.6	7100 802.2	7500 847.4	14000 1581.8	25000 2824.6
20 DN500	20.000 508.0	6060 684.7	7310 825.9	10200 1152.4	14000 1581.8	17500 1977.2	27500 3107.1	46400 5242.5
24 DN600	24.000 609.6	8720 985.2	10130 1144.5	14800 1672.2	20000 2259.7	24000 2711.6	48000 5423.3	102000 11524.5

Source:

These torque values were derived from test data with valves in water at ambient temperatures with EPDM seals. For other material and service conditions, apply a suitable service factor.

Torque Factors:

All torque values are for normal conditions (i.e., the valve is operated at least once a quarter, disc corrosion is expected to be minor, the media is clean and nonabrasive, and the chemical effects upon the elastomer are minor).

Typical Fluid Torque Factors Commonly Used in the Industry:

Water: 1.0; Lubricated service: 0.8; Dry gases: Lubricated nitrile "T" seat seals may be specified for dry gases wherever chemically appropriate. See material torque factor below.

Material Torque Factors:

EPDM = 1.0; Fluoroelastomer = 1.2; Nitrile = 0.8

Cycling Factor:

Valve torque will typically increase and actuator output decrease as the valve is cycled. A factor of 1.5 should be applied for when total valve cycles are expected to exceed 5,000.

Actuation Factor:

A factor should be added to account for potential drift in the output of the actuator due to actuator performance, misalignment or external inputs (i.e., air or power supply). For this, a factor of up to 1.25 may be used.

Combining Torque Factors:

When multiple torque factors apply, they are combined by multiplying them. Example: For an EPDM seal and a 5,000-cycle factor, the combined factor would be 1.0 X (1.5) = 1.5.

NOTES

- Under certain high flow conditions, the hydrodynamic torque can exceed the seating torque. Large butterfly valves are not recommended for use in a free discharge condition, such as filling an empty line with fluid at the full-rated pressure.
- Contact Victaulic for other services.

 © 2024 Victaulic Company. All rights reserved.

5.6 PERFORMANCE

Series W761 AGS™ Vic-300™ MasterSeal™ Butterfly Valve

Typical Specifications

Butterfly valves 14 – 24"/DN350 – DN600 shall be rated to 300 psi/2100 kPa/21 bar and be suitable for bi-directional service to full-rated pressure. Body material shall be ductile iron with blowout proof stainless steel stems and black PPS coated ductile iron disc. Seat material shall be EPDM and have a full 360° continuous contact with the seating surface. Stem seals shall be of the same material grade as the seats. Valve ends shall be grooved. Valve shall have standard ISO flange mounting for ease of actuation. Operators shall be as specified by choice in valve table.

Numbering System

W 180 761 S E 3

Type	Actual OD inch/mm	Size Code	Series	Disc/Stem	Seat/Seals	Operator*
W	14/355,6 16/406,4 18/457 20/508 24/610	140 160 180 200 240	761 - Series 761 Butterfly Valve	S - PPS Coated Ductile Iron/ Stainless Steel	E - Grade 'E' - EPDM T - Grade 'T' - Nitrile O - Grade 'O' -Fluoroelastomer	0 - Bare Valve 3 - Gear Operator 5 - Gear Operator with Memory Stop 6 - Gear Operator with Chainwheel 7 - Gear Operator with Memory Stop and Chainwheel 9 - Non-standard Gear Operator*

*Details required

 © 2024 Victaulic Company. All rights reserved.

5.7 PERFORMANCE

Series W761 AGS™ Vic-300™ MasterSeal™ Butterfly Valve

Important Installation Considerations

When installing a Victaulic butterfly valve into a piping system, follow the instructions supplied with the coupling. Refer to the notes below for applications/limitations.

When using butterfly valves for throttling service, Victaulic recommends the disc be positioned no less than 30 degrees open. For best results, the disc should be between 30 and 70 degrees open. High pipeline velocities and/or throttling with the disc less than 30 degrees open may result in noise, vibration, cavitation, severe line erosion, and/or loss of control. For details regarding throttling services, contact Victaulic.

Victaulic recommends good piping practices and installing the valve five pipe diameters downstream of sources of irregular flow, such as pumps, elbows and control valves. If not practical due to space constraints, the system should be designed to locate and orient the valve to minimize the impact of dynamic torque and valve life.

Victaulic butterfly valves are designed with grooved ends for use with grooved pipe couplings. If flange connections are required, refer to the following notes regarding Vic-Flange® Adapter restrictions.

- Style W741 Vic-Flange Adapters can be used on all sizes of Series W761 Vic®-300 MasterSeal™ Butterfly Valves.

DO NOT INSTALL BUTTERFLY VALVES INTO THE SYSTEM WITH THE DISC IN THE FULLY OPEN POSITION.

 © 2024 Victaulic Company. All rights reserved.

6.0 NOTIFICATIONS

WARNING

- **Read and understand all instructions before attempting to install, remove, adjust, or maintain any Victaulic piping products.**
- **Depressurize and drain the piping system before attempting to install, remove, adjust, or maintain any Victaulic piping products.**
- **Wear safety glasses, hardhat, and foot protection.**

Failure to follow these instructions could result in death or serious personal injury and property damage.

7.0 REFERENCE MATERIALS

25.09: AGS Roll Groove Specifications
I-100: Victaulic Field Installation Handbook
I-W100: AGS Field Installation Handbook

User Responsibility for Product Selection and Suitability
Each user bears final responsibility for making a determination as to the suitability of Victaulic products for a particular end-use application, in accordance with industry standards and project specifications, and the applicable building codes and related regulations as well as Victaulic performance, maintenance, safety, and warning instructions. Nothing in this or any other document, nor any verbal recommendation, advice, or opinion from any Victaulic employee, shall be deemed to alter, vary, supersede, or waive any provision of Victaulic Company's standard conditions of sale, installation guide, or this disclaimer.

Intellectual Property Rights
No statement contained herein concerning a possible or suggested use of any material, product, service, or design is intended, or should be constructed, to grant any license under any patent or other intellectual property right of Victaulic or any of its subsidiaries or affiliates covering such use or design, or as a recommendation for the use of such material, product, service, or design in the infringement of any patent or other intellectual property right. The terms "Patented" or "Patent Pending" refer to design or utility patents or patent applications for articles and/or methods of use in the United States and/or other countries.

Note
This product shall be manufactured by Victaulic or to Victaulic specifications. All products to be installed in accordance with current Victaulic installation/assembly instructions. Victaulic reserves the right to change product specifications, designs and standard equipment without notice and without incurring obligations.

Installation
Reference should always be made to the Victaulic installation handbook or installation instructions of the product you are installing. Handbooks are included with each shipment of Victaulic products, providing complete installation and assembly data, and are available in PDF format on our website at www.victaulic.com.

Warranty
Refer to the Warranty section of the current Price List or contact Victaulic for details.

Trademarks
Victaulic and all other Victaulic marks are the trademarks or registered trademarks of Victaulic Company, and/or its affiliated entities, in the U.S. and/or other countries.

20.06 3856 Rev I Updated 08/2024 © 2024 Victaulic Company. All rights reserved.