Flexible Hose with Captured Couplings

Series C2C

⚠ WARNING

- **Read and understand all instructions before attempting to install any Victaulic products.**
- **Always verify that the piping system has been completely depressurized and drained immediately prior to installation, removal, adjustment, or maintenance of any Victaulic products.**
- **Confirm that any equipment, branch lines, or sections of piping that may have been isolated for/during testing or due to valve closures/positioning are identified, depressurized, and drained immediately prior to installation, removal, adjustment, or maintenance of any Victaulic products.**
- **Wear safety glasses, hardhat, and foot protection.**
- **These installation instructions are intended for an experienced, trained installer. The installer shall understand the use of this product and why it was specified for the particular application.**
- **The installer shall understand common industry safety standards and potential consequences of improper product installation.**
- **It is the system designer's responsibility to verify suitability of stainless steel flexible hose for use with the intended fluid media within the piping system and external environment.**
- **The material specifier shall evaluate the effect of chemical composition, pH level, operating temperature, chloride level, oxygen level, and flow rate on stainless steel components to confirm system life will be acceptable for the intended service.**

Failure to follow installation requirements could compromise system integrity or cause system failure, resulting in death or serious personal injury and property damage.

Maximum Working Pressure Rating of Series C2C:

200 psi/14 Bar/1380 kPa (FM)
175 psi/12 Bar/1210 kPa (UL)

Maximum Ambient Temperature Rating of Series C2C:

225° F/107° C

Connection to Piping:

1 inch/DN25 IGS

Minimum Bend Radius of Series C2C:

2 inch/50 mm

Maximum Number of 90° Bends Per Series C2C:

Refer to the table below

Series C2C Bend Characteristics:

NOTE: Care shall be taken to avoid torquing the flexible hose.

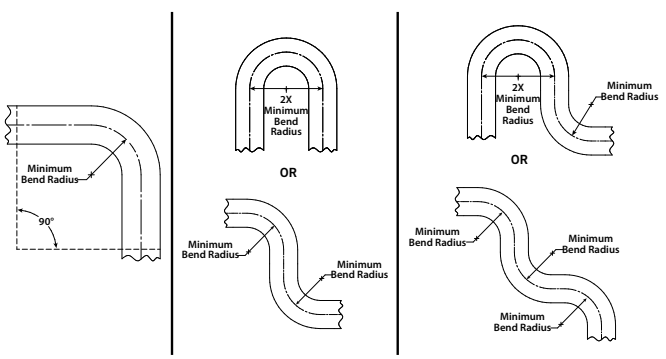

Series C2C Flexible Hose with Captured Couplings Friction Loss Data

Model	Length of Series C2C inches/mm	Equivalent Length of 1-inch/DN25 Schedule 40 Pipe feet/meters	Maximum Number of 90° Bends§
AH2-C2C-31	31 790	18 5.5	4
AH2-C2C-36	36 915	22 6.7	4
AH2-C2C-48	48 1220	33 10.1	6
AH2-C2C-60	60 1525	35 10.7	6
AH2-C2C-72	72 1830	48 14.6	8

§ A higher number of bends may be permitted, provided the sum of degrees is equal to or less than the total maximum allowable degrees of bends (e.g. Two 90° bends equal 180°. Three 90° bends equal 270°). The minimum bend radius and maximum number of 90° offset (bends), stated in these installation instructions, refer to the final installed condition of the hose.

NOTICE

- **Victaulic does not recommend the use of any furnace butt-welded pipe in sizes NPS 2"|DN150 and smaller with Victaulic gasketed joint products. This includes, but is not limited to, ASTM A53 Type F pipe.**

Scan QR Code for Application Note AN-001

SERIES C2C ASSEMBLY DRAWING

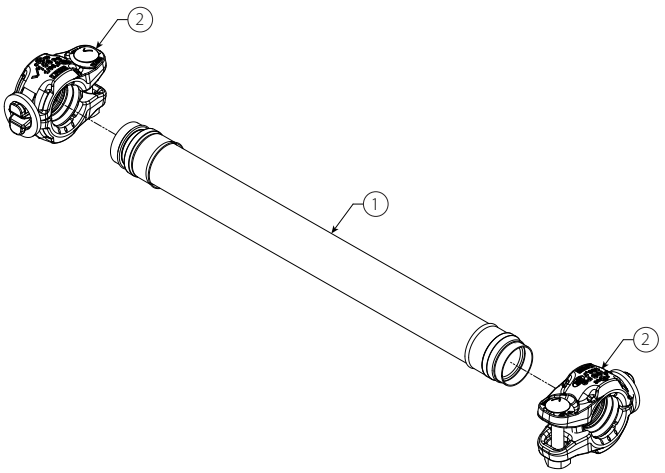

Item	Description
1	Flexible Hose Assembly
2	Coupling Assembly

IMPORTANT INSTALLATION INFORMATION

NOTICE

- **A hanger or similar restraint shall be placed at either end to eliminate torsional and axial movement and limit lateral and angular movement to within product specifications.**

- The Series C2C may be painted or coated, provided that the paint or coating is compatible with stainless steel material.
- **The Series C2C has limited flexibility and is intended only to be installed with bends not less than its respective minimum bend radii.**

INSTALLATION OF THE SERIES C2C WITH CAPTURED COUPLINGS (1-INCH/DN25 IGS CONNECTION)

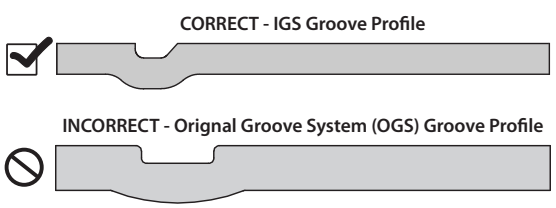

Pipe and grooves are not shown to scale

The Style 108 Coupling of the Series C2C shall be used **ONLY** with piping connections that are prepared to Victaulic IGS proprietary groove specifications. **DO NOT** attempt to install the coupling on piping connections that are prepared to any other groove specification. Refer to Victaulic publication 25.14 for the IGS groove specification, which can be downloaded at victaulic.com.

⚠ WARNING

- **The Series C2C shall not be bent or fluctuated up-and-down or side-to-side when pressurized.**

Failure to follow this instruction could cause joint failure, resulting in death or serious personal injury and property damage.

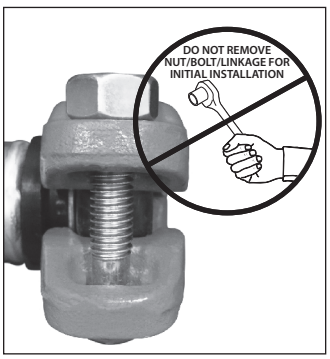

1. DO NOT DISASSEMBLE THE COUPLING: The Style 108 Couplings of the Series C2C are designed so that the installer does not need to remove the nut, bolt, or linkage for initial installation. This facilitates installation by allowing the installer to directly insert the grooved end of the piping into the coupling.

2. The outside surface of the piping, between the groove and the end of the piping, shall be generally free from indentations, projections, weld seam anomalies, and roll marks to ensure a leak-tight seal. All oil, grease, loose paint, dirt, and cutting particles shall be removed.

The piping's outside diameter ("OD"), groove dimensions, and maximum allowable flare diameter shall be within the tolerances published in current Victaulic IGS specifications, publication 25.14, which can be downloaded at victaulic.com.

3. Check the gasket to verify that it is suitable for the intended service. The color code identifies the material grade. **Refer to Victaulic publication 05.01 for the color code chart, which can be downloaded at victaulic.com, and the "NOTICE" below for important gasket information.**

⚠ CAUTION

- **If any conditions listed in the "NOTICE" below are met, a thin coat of a compatible lubricant shall be applied only to the gasket sealing lips to help prevent the gasket from pinching, rolling, or tearing during installation.**
- **DO NOT use excessive lubricant on the gasket sealing lips.**

Failure to use a compatible lubricant may cause gasket damage, resulting in joint leakage and property damage.

3a. If any conditions listed in the "NOTICE" below are met, apply a thin coat of a compatible lubricant, such as Victaulic Lubricant or an EPDM-compatible lubricant, only to the gasket sealing lips. Silicone grease may be used (silicone spray is not a compatible lubricant).

NOTICE

- **Gaskets for Style 108 Coupling assemblies of the Series C2C are pre-lubricated. Additional lubrication is not required for the initial installation of wet pipe systems that are installed at or continuously operating above 0°F/–18°C.**

Supplemental lubrication is required only if any of the following conditions exist. Apply a thin coat of a compatible lubricant to the gasket sealing lips, as noted in step 3a on this page. It is not necessary to remove the gasket from the housings to apply additional lubricant to the gasket sealing lips.

- **If the installation or continuous operating temperature is below 0°F/–18°C**
- **If the gasket has been exposed to fluids prior to installation**
- **If the surface of the gasket has a dark black or shiny appearance**
- **If the gasket is being installed into a dry pipe system**
- **If the system will be subjected to air tests prior to being filled with water**
- **If the gasket was involved in a previous installation**

Lubricated gaskets will not enhance sealing capabilities on adverse piping conditions. Piping condition and preparation shall conform to the requirements listed in these product installation instructions.

⚠ WARNING

- **Never leave a Style 108 Coupling of a Series C2C partially assembled on grooved piping. ALWAYS TIGHTEN THE HARDWARE IMMEDIATELY, IN ACCORDANCE WITH THESE INSTRUCTIONS. A partially assembled coupling poses a drop or fall hazard during installation and a burst hazard during testing.**
- **Keep hands away from the grooved piping and the openings of the coupling when attempting to insert the grooved piping into the coupling.**
- **Keep hands away from coupling openings during tightening.**

Failure to follow these instructions could result in death or serious personal injury and property damage.

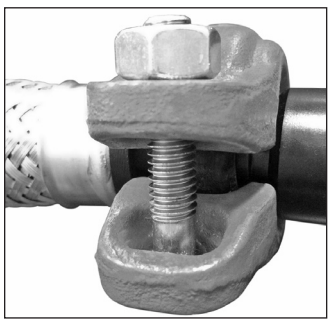

4. Assemble the joint by inserting the grooved end of the piping into the opening of the coupling. The grooved piping shall be inserted into the coupling until contact with the center leg of the gasket occurs. A visual check is required to verify that the coupling keys align with the groove in the piping and engage with the spacer on the inlet end of the flexible hose.

⚠ WARNING

- **The nut shall be tightened until metal-to-metal contact occurs at the bolt pads, as indicated in steps 5 and 6.**
- **DO NOT continue to tighten the nut after metal-to-metal bolt pad contact is achieved.**

Failure to follow instructions for tightening hardware could result in:

- **Damage to the assembled joint (damaged or broken bolt pads or fractures to housings)**
- **Bolt damage or fracture**
- **Joint leakage and property damage**
- **A negative impact on system integrity**
- **Personal injury or death**

NOTICE

- **During tightening, support the hose near the Style 108 Coupling to verify that the end of the Series C2C remains straight and aligned with the coupling.**

OVAL NECK OF BOLT SEATED PROPERLY

OVAL NECK OF BOLT NOT SEATED PROPERLY

5. Using an impact tool or a standard socket wrench with an 11⁄16-inch (for Imperial nuts)/17-mm (for Metric nuts) deep-well socket, tighten the nut until metal-to-metal contact occurs at the bolt pads. **MAXIMUM ALLOWABLE BOLT TORQUE IS 55 ft-lbs/75 N•m.** Verify that the oval neck of the bolt seats properly in the bolt hole. DO NOT continue to tighten the nut after the visual inspection requirements, shown on this page, are achieved. **If you suspect that any hardware has been over-tightened (as indicated by a bend in the bolt, bulging of the nut at the bolt pad interface, or damage to the bolt pad, etc.), the entire coupling assembly shall be replaced immediately.** Refer to the I-IMPACT for impact tool usage/selection guidelines, which can be downloaded by scanning the QR code on this page.

⚠ WARNING

- **Visual inspection of each joint is required.**
- **Improperly assembled joints shall be corrected before the system is tested or placed into service.**
- **Any components that exhibit physical damage due to improper assembly shall be replaced before the system is tested or placed into service.**

Failure to follow these instructions could cause joint failure, resulting in death or serious personal injury and property damage.

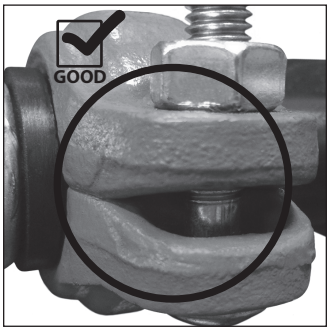

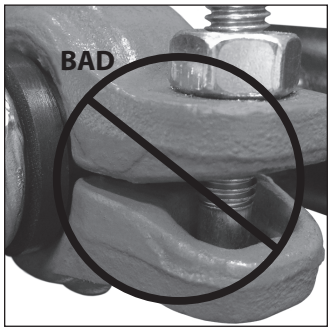

6. Visually inspect the bolt pads at each joint to verify that metal-to-metal contact is achieved, in accordance with step 5.

7. Repeat all steps in this section to install the other coupling of the Series C2C assembly.

NOTICE

- **Refer to the instructions on the following page for reassembly requirements.**

Scan QR code for access to the I-IMPACT, Impact Tool Usage/Selection Guidelines, document on victaulic.com.

Flexible Hose with Captured Couplings

Series C2C

INSTRUCTIONS FOR REASSEMBLY

⚠ WARNING

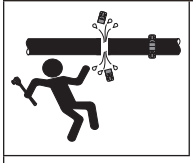

- **Always verify that the piping system has been completely depressurized and drained immediately prior to installation, removal, adjustment, or maintenance of any Victaulic products.**
- **Confirm that any equipment, branch lines, or sections of piping that may have been isolated for/during testing or due to valve closures/positioning are identified, depressurized, and drained immediately prior to installation, removal, adjustment, or maintenance of any Victaulic products.**

Failure to follow this instruction could result in death or serious personal injury and property damage.

1. Verify that the system is depressurized and drained completely before attempting to remove a Series C2C Flexible Hose from the piping.

2. While supporting the Style 108 Coupling on one end, loosen the nut until backed off no further than flush with the end of the bolt. Repeat this step for the Style 108 Coupling on the other end. Carefully remove the Series C2C assembly from the piping.

3. Fully disassemble the Style 108 Coupling from the ends of the Series C2C by removing the nut, bolt, gasket, and linkage from the housings. Inspect all components for any damage or wear. If any damage or wear is present, use a new Victaulic-supplied coupling assembly.

4. Verify that the outside surface of the piping, between the groove and the end of the piping, is generally free from indentations, projections, weld seam anomalies, and roll marks to ensure a leak-tight seal. All oil, grease, loose paint, dirt, and cutting particles shall be removed.

The piping's outside diameter ("OD"), groove dimensions, and maximum allowable flare diameter shall be within the tolerances published in current Victaulic IGS specifications, publication 25.14, which can be downloaded at victaulic.com.

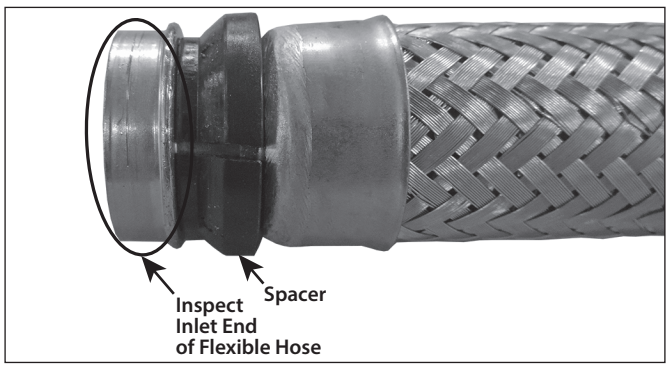

5. Inspect the ends of the Series C2C to verify that there is no damage (dents, crushed edges, etc.). A new, Victaulic-supplied Series C2C shall be used if any damage is present.

6. Verify that the spacer is oriented on each end of the Series C2C, as shown above.

⚠ CAUTION

- **A thin coat of a compatible lubricant shall be used to help prevent the gasket from pinching, rolling, or tearing during reassembly.**
- **DO NOT use excessive lubricant on the gasket sealing lips and exterior.**

Failure to use a compatible lubricant may cause gasket damage, resulting in joint leakage and property damage.

7. Apply a thin coat of a compatible lubricant, such as Victaulic Lubricant or an EPDM-compatible lubricant, to the gaskets' sealing lips and exterior. Silicone grease may be used (silicone spray is not a compatible lubricant).

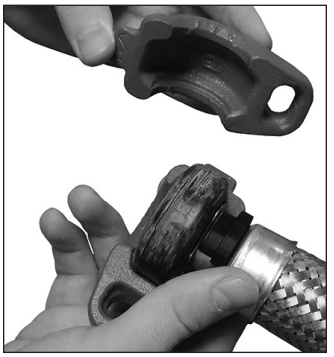

8. Place a lubricated gasket onto one end of the Series C2C, then place the Style 108 Coupling housings over the gasket. Verify that the gasket is seated fully in the gasket pocket of each housing and that the housings' keys engage with the spacer.

9. Install the linkage onto the housings, as shown to the left.

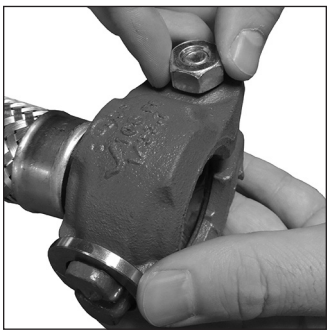

10. Install the bolt, and thread a nut onto the bolt. **NOTE:** Verify that the oval neck of the bolt seats properly in the bolt hole. DO NOT tighten the nut completely. The bolt pads need to be set at a gap for reinstallation of the coupling. The nut should be flush with the top of the bolt to provide the proper gap.

11. Repeat steps 8 – 10 above for the other Style 108 Coupling.

12. Follow all steps on page 3.